Experiment No. 7	
MULTIPLEXER AND DEMULTIPLEXER	
Course Code: CPE 013	**Program:**
Course Title: Logic Circuits and Design	**Date Performed: 26/2/2026**
Section: BSCpE22S2	**Date Submitted: 26/2/2026**
Members: Bulaong, Ross Andrew D.	**Instructor: Engr. Noel Lusung**
Florencio, David	
Malabanan, Nadine	
Que, Josef Leroy	
Zapanta, Russell	

1. Objective:

This activity aims to implement and showcase how multiplexer and demultiplexer works.

2. Intended Learning Outcomes (ILOs):

The students should be able to:
2.1. Understand and analyze how multiplexer and demultiplexer works.
2.2. Construct truth table and simulate circuit diagram for multiplexer and demultiplexer.

3. Discussion

Multiplexer
A Multiplexer or Mux is a device that has many inputs and a single output.

- **4-to-1 Multiplexer**
  The 4X1 multiplexer comprises 4-input bits, 1- output bit, and 2- control bits. The four input bits are namely 0, D1, D2 and D3, respectively; only one of the input bits is transmitted to the output.

De-Multiplexer
A demultiplexer is a device, that has one input and multiple output lines which is used to send a signal to one of the various devices. The most prominent distinction between a multiplexer and demultiplexer is that a multiplexer takes two or a lot of signals and encodes them on a wire, whereas a demultiplexer reverses what the multiplexer does.

- **1-4 De-multiplexers**
  The 1-to-4 demultiplexer comprises 1- input bit, 4-output bits and – control bits. The 1X4 demultiplexer circuit diagram is shown below.

4. Resources:

Materials:

- Personal Computer
- Internet connection
  Simulation Tools:
  - TinkerCAD
  - Logicly

5. Procedure:

1. Construct and simulate the circuit as shown in Figure 7.1 in Logicly and TinkerCAD.

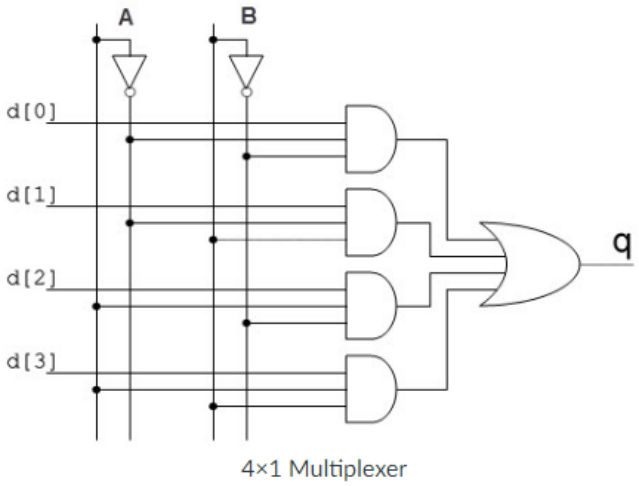

Figure 7.1. 4x1 Multiplexer

2. Apply the different combinations to the data switches and observe the corresponding output in every combination. Record the answers in Table 7.1 in section 6. Take the screenshot of each combination in Logicly.

3. Repeat step 1 for Figure 7.2.

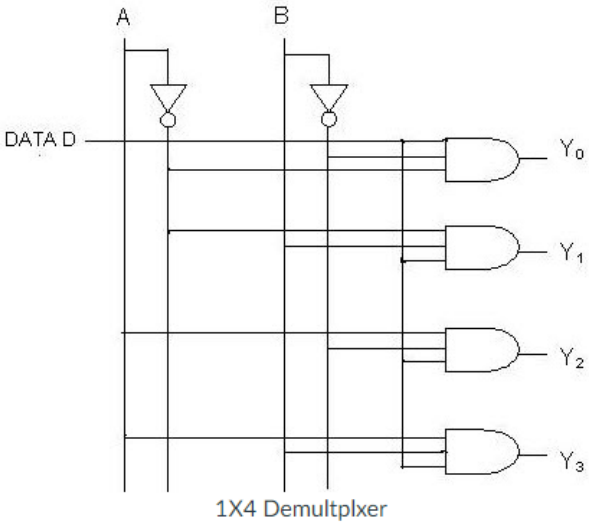

Figure 7.2. 1x4 Demultiplexer

4. Repeat step 2 but record the answers in Table 7.2.

Table 5.1 4x1 Multiplexer Truth Table

S1	S0	A	B	C	D	Output
0	0	0	X	X	X	0
0	0	1	X	X	X	1
0	1	X	0	X	X	0
0	1	X	1	X	X	1
1	0	X	X	0	X	0
1	0	X	X	1	X	1
1	1	X	X	X	0	0
1	1	X	X	X	1	1

Table 5.2 1x4 Demultiplexer Truth Table

Input	S1	S0	Y0	Y1	Y2	Y3
0	0	0	0	0	0	0
0	0	1	0	0	0	0
0	1	0	0	0	0	0
0	1	1	0	0	0	0
1	0	0	1	0	0	0
1	0	1	0	1	0	0
1	1	0	0	0	1	0
1	1	1	0	0	0	1

6. Data and Results:

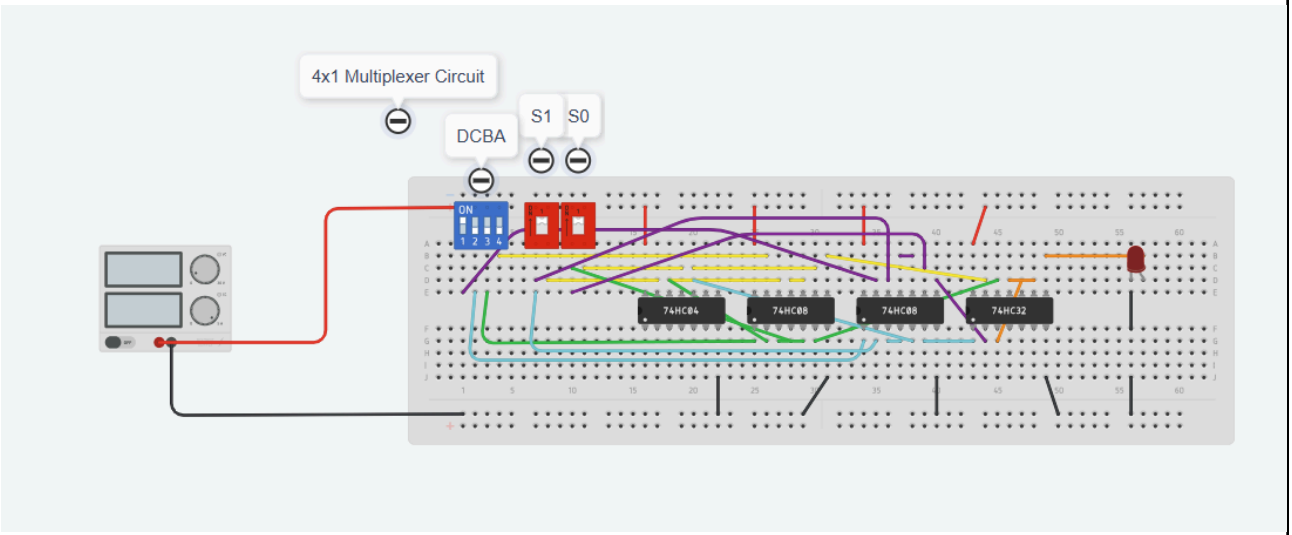

4x1 Multiplexer TinkerCAD Circuit Configuration

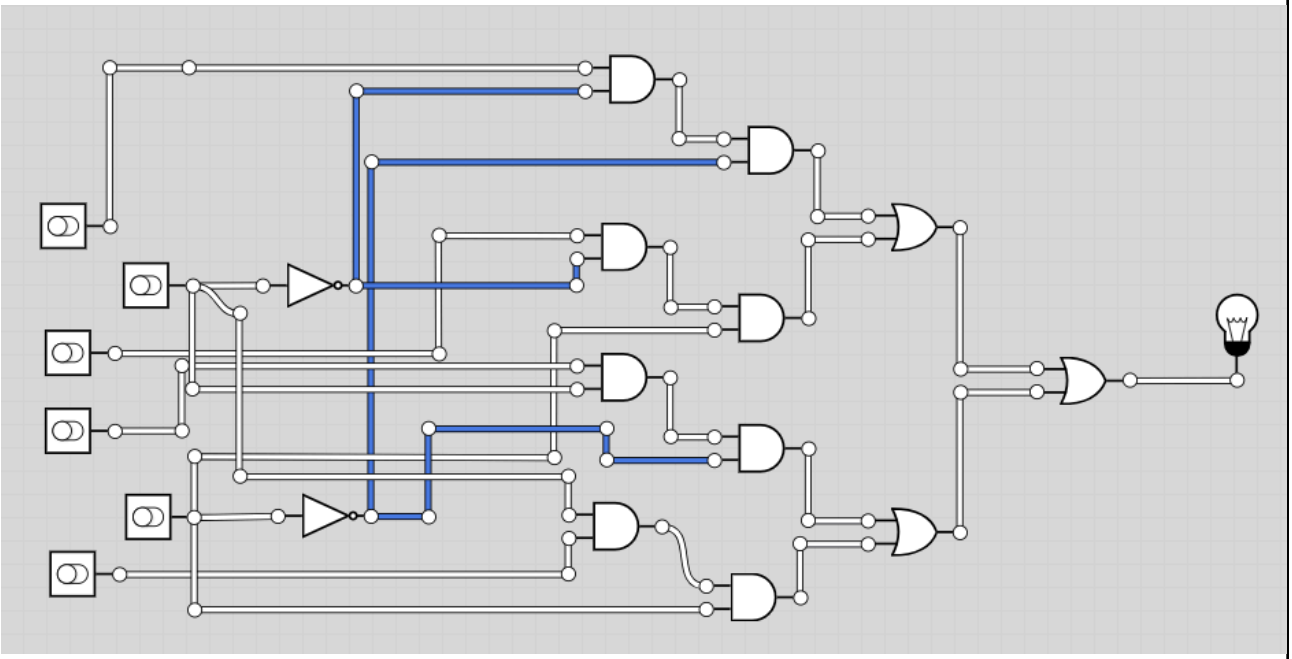

4x1 Multiplexer Logicly Circuit Configuration

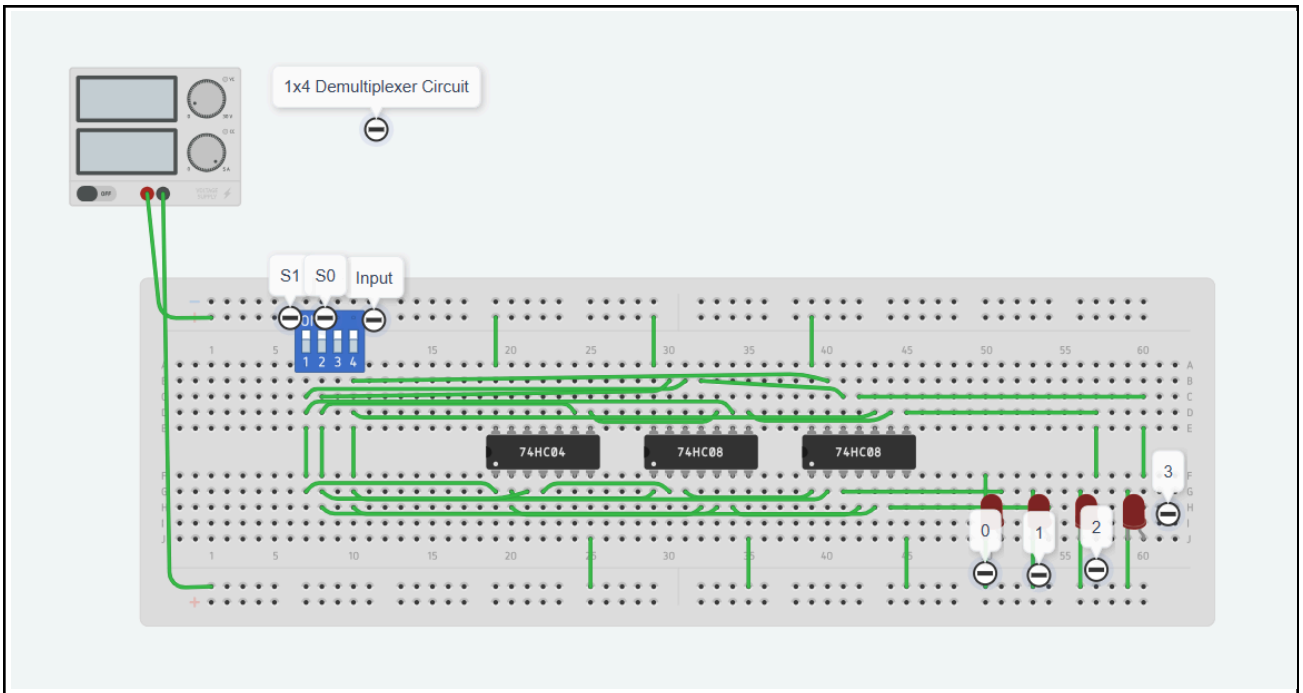

1x4 Demultiplexer TinkerCAD Circuit Configuration

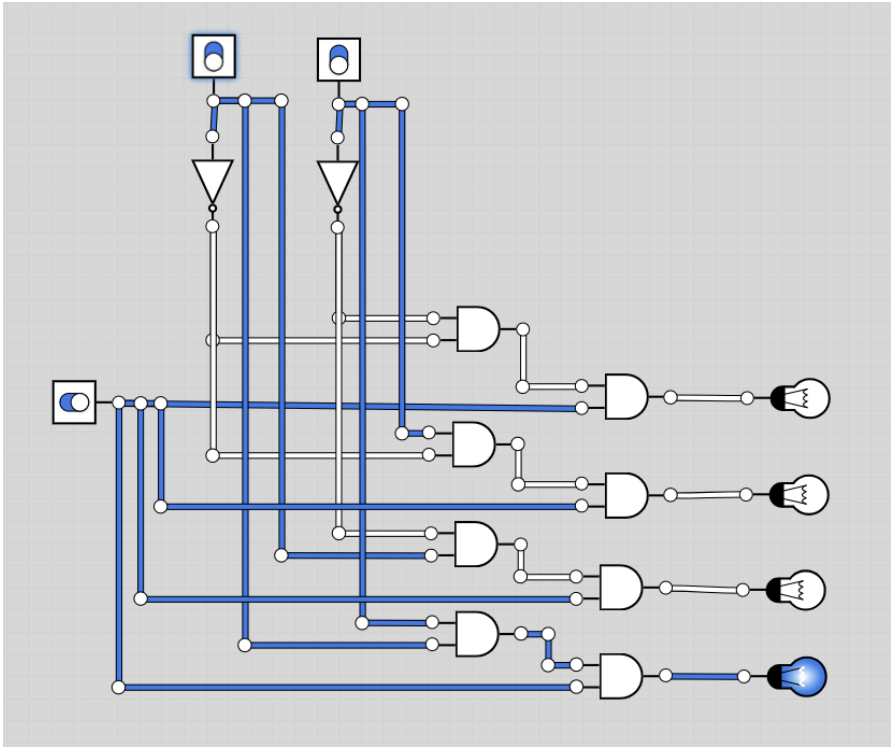

1x4 Demultiplexer Logicly Circuit Configuration

7. Final Output

Screenshot or print screen of TinkerCAD application different output simulations (5 points deductions for only one output in every required circuit). Also, upload a video of the simulated circuit naming or talking about the shown input combinations. Failure to comply to each instruction will resulted to 5 points deductions. Please include the recorded simulation video in this section and write at least one sentence definition or label for each figure or image.

MULTIPLEXER
Gdrive: Multiplexer

DEMULTIPLEXER
Gdrive: LOGICLY and TINKERCAD Demultiplexers - Google Drive

TinkerCAD Circuit config:
https://www.tinkercad.com/things/kznEDTMfDNt-4x1-multiplexer-and-1x4-demultiplexer-

8. Conclusion:

Write a one paragraph (at least 10 sentences) Conclusion for this activity.

The multiplexer and demultiplexer operation became clear to us through our study of select line signal control in circuit systems. The multiplexer operation enables selection of a single input from multiple sources which it transmits through its output based on the chosen select lines. The demultiplexer function conveys a single input to multiple outputs which it selects through its control settings. The circuits function as data routing systems for digital technology because we studied their logical structure and their connection points. The truth tables we created established a clear connection between input signals, select lines, and their corresponding outputs. The truth tables we created enabled us to determine which outputs would result from every possible input combination. The circuit diagrams we made from truth tables allowed us to see how the various parts of the system connected with each other. The simulation tests confirmed whether our circuits generated the correct results. The practical experience enabled us to find and fix all design errors in our project. The process of building and examining multiplexers and demultiplexers through circuit simulation enabled us to achieve a deeper understanding of their operation.

9. Questions:

1. What do you think is the importance of application of mux and demux?
   - MUX and DEMUX are important in digital and communication because they allow signals to be combined and separated. MUX combines multiple input signals into one output, reducing the cost for the hardware. While DEMUX separates combined signals back to individual input.

2. What other industry related devices do you think uses multiplexer or demultiplexer? Cite at least one example and explain it in at least 2-4 sentences.

- A common example of device that uses MUX and DEMUX is telecommunications equipment. Since it involves changing information over long distances. It uses MUX to combine multiple signals like voice and video into a single line reducing the need for separate cables. At the receiving end, a DEMUX separates this combined signal back into individual signals, ensuring accurate delivery to the correct destinations.

9. Assessment (Rubric for Laboratory Performance):

Laboratory Performance Rubric (2)

Criteria	Ratings			Pts
Manipulative Skills	**3 pts** **Proficient** Student always demonstrate needed skills.	**2 pts** **Acceptable** Student occasionally demonstrate needed skills.	**1 pts** **Beginner** Student do not demonstrate needed skills.	3 pts
Experimental Set - up	**3 pts** **Proficient** Student are able to set-up the material with minimum supervision.	**2 pts** **Acceptable** Student are able to set-up the materials with supervision.	**1 pts** **Beginner** Student are unable to set-up the materials.	3 pts
Process Skills	**3 pts** **Proficient** Student always demonstrate targeted process skills.	**2 pts** **Acceptable** Student occasionally demonstrate targeted process skills.	**1 pts** **Beginner** Student do not demonstrate targeted process skills.	3 pts
Application of Technical Writing Skills	**3 pts** **Proficient** Correct spelling, grammar, and sentence construction when writing the Discussion, Observation, and Conclusion are applied in the laboratory report.	**2 pts** **Acceptable** Some minor incorrect spelling, wrong grammar, and wrong sentence construction when writing the Discussion, Observation, and Conclusion are applied in the laboratory report.	**1 pts** **Beginner** Many incorrect spelling, wrong grammar, and wrong sentence construction when writing the Discussion, Observation, and Conclusion are applied in the laboratory report.	3 pts
Time Management / Conduct of Experiment	**3 pts** **Proficient** Student finish ahead of time with complete data and time to revise data.	**2 pts** **Acceptable** Student finish on time with incomplete data.	**1 pts** **Beginner** Student do not finish on time with incomplete data.	3 pts
Complete Requirements of Laboratory Report	**3 pts** **Proficient** Student submitted a complete requirements set by the teacher.	**2 pts** **Acceptable** Student submitted an almost complete Laboratory Report according to requirements set by the teacher.	**1 pts** **Beginner** Student submitted a lot of missing requirements in the Laboratory Report according to requirements set by the teacher.	3 pts
Follow the Correct Format of Laboratory Report	**3 pts** **Proficient** Student submitted a correct format of Laboratory Report according to requirements set by the teacher.	**2 pts** **Acceptable** Student submitted an almost correct format of Laboratory Report according to requirements set by the teacher.	**1 pts** **Beginner** Student did not follow at all the format of Laboratory Report according to requirements set by the teacher.	3 pts
Ability to do independent work	**3 pts** **Proficient** Student do not need to be supervised by the teacher.	**2 pts** **Acceptable** Student require occasional supervision by the teacher.	**1 pts** **Beginner** Student require supervision by the teacher.	3 pts
				Total Points: 24